Handling and conveying systems – efficient and safe

- **Elevators**
- **Trough chain conveyors**
- **Screw conveyors**
- **Conveyor belts**

Schmidt-Seeger

Table of contents

High-performing and present all over the world

The applications of modern handling and conveying systems are virtually unlimited. Handling and conveying systems made by Schmidt-Seeger are therefore the systems of choice for many branches of industry all over the world. Our brand name has become synonymous for the efficient and safe handling of bulk goods of all types.

Our elevators, conveyor belts, trough chain and screw conveyors and our numerous special models are designed specific to the product and are tailor-made to our customers' requirements.

Solutions made by Schmidt-Seeger are always cost-effective. After all, high throughput rates and custom design have to remain affordable. That is why we are constantly optimizing our in-house processes. And why we uncompromisingly believe in rational and efficient manufacturing technologies. To meet these requirements for the benefit of our customers.

Thousands of successfully completed projects speak volumes about the performance and efficiency of our machines and plants. And they are convincing proof for satisfied customers and the quality of our products.

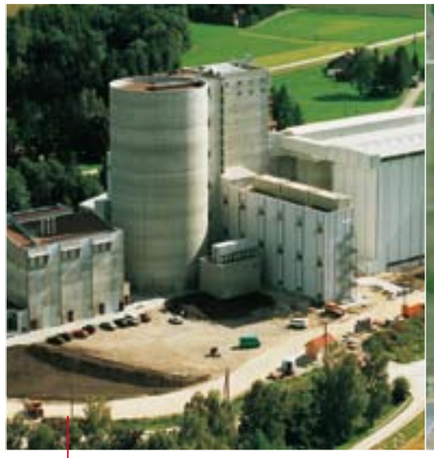

Malt houses

Biomass processing

Building materials industry

Food industry

Grain industry

Elevators
Vertical take-off in mechanical handling

Modern elevator technology must meet today's sophisticated quality criteria when it comes to economical, fast and reliable handling of large quantities of goods.

We pay attention to this requirement when developing and designing our elevators:

- **High Throughput capacity** (up to 800 tonnes per hour) with nevertheless compact sizes
- **Optimized reliability** thanks to an integral reversing lock, electronic speed monitoring, and electronic belt guide control (run-out monitor)
- **Flexible and cost-effective range** of applications thanks to a comprehensive accessories package

Elevators
Product design

Performance range

- From 5 t/h to 800 t/h

Elevator head

- Split hood for easy installation and maintenance
- Replaceable wear plate
- Inspection- and cleaning port at the discharge point
- Dust-protected bearings
- Drive with gear motor and flexible coupling
- Integral reversing lock for safe and reliable operation
- Optionally available with internal liner made of wear-resistant plastic
- Run-out monitor

Belt

- Rubber belt with polyester liner
- Optionally available with PVC belt
- Optionally available with food-safe belts

Elevator foot

- Spindle-operated belt tension adjuster
- Generously dimensioned cleaning ports
- Integrated residue discharge slide
- Stave disc for gentle product pick-up
- Dust-protected bearings
- RPM- and run-out monitor

Components

1 Elevator head
Easy assembly and maintenance thanks to divided hood and exchangeable wearing plate as well as inspection opening

2 Elevator foot
with inspection opening, clean-out slide and spindle tensioning device

3 Stave disk
in elevator foot for gentle product pick-up

Safety

RPM monitor

Run-out monitor

Inspection window

Reversing lock

Elevators
Accessories

Specific applications require comprehensive accessories. Backed by our many years of involvement in a wide variety of fields we have developed a large number of components for customer-specific solutions.

Please let us know your specific needs and we shall be glad to advise you at any time and without any obligation.

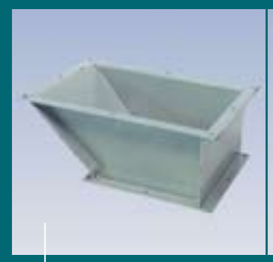

Intermediate hopper at elevator outlet

Adjusting segment 30-60°

Pipe transition piece
„square-to-round"

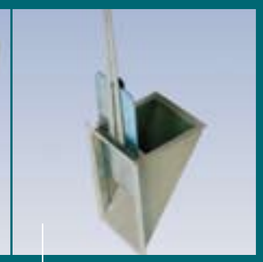

Elevator inlet
with slide and slide positioning lock

Two-way-valve box 45°
electrically operated

Two-way-valve box 45°
pneumatically operated

Cover with flanged pipe socket
for elevator inlet

Heavy duty wear resistant plastic coating, e.g. for elevator head and foot, pipes and pipe parts – abrasion resistance 15-20 times better than steel

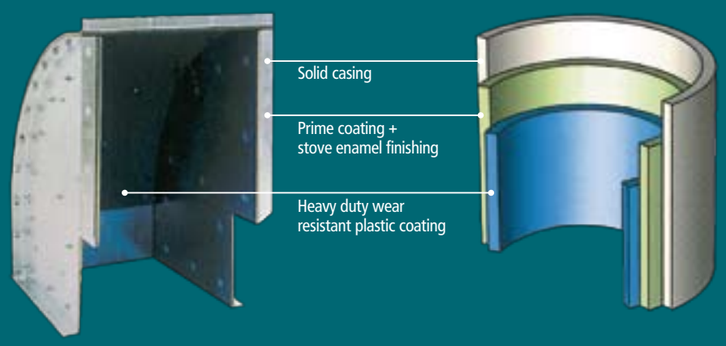

Elevators
Special designs

Z-track conveyors

Developed mainly for use in the cement and building materials industry, the ceramics industry and the chemical industry sector, this model features a particularly sturdy construction. External bearings, a revolving Flexowell belt and strong cleats are further characteristics. Handling capacity ranges from 10 to 200 m^3/h.

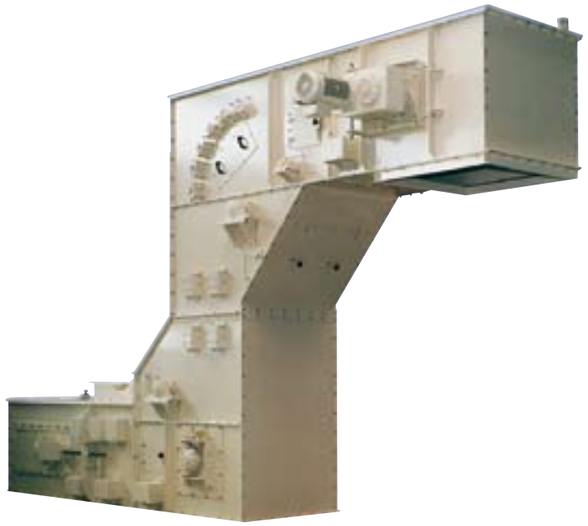

Swing bucket elevators for perfectly gentle handling of delicate products. Particularly suitable for use in the seed, animal feed and food industries.

Chain elevators are particularly suitable for use e. g. in the building materials industry. They are dust-proof and specially designed for handling coarse and hot products.

Elevator head
pressure-surge protected design with electronic belt-guide control (run-out monitor)

Elevator foot
pressure-surge protected design with electro-mechanical belt-guide control (run-out monitor)

Elevator head
with pressure relief opening

Elevators

Technical data

Type	Technical data									
	Capacity (t/h)	Max. Conveying height (m)	Belt speed (m/sec)	RPM (1/min)	Buckets		Belt		Belt disk	
					Size	No. of buckets per m	Width (mm)	Material type EP	Diameter (mm)	Width (mm)
400/140	5	25	3.1	148	10	2.5	110	500	400	140
400/140	10	25				5.0				
400/140	20	25				9.5				
400/180	30	25	3.1	148	13	7.0	140	500	400	180
500/180	30	35		118		7.0		500	500	
630/180	30	50		94		7.0		630	630	
400/180	40	25		148		9.5		500	400	
500/180	40	35		118		9.5		500	500	
630/180	40	50		94		9.5		630	630	
400/225	50	25	3.1	148	18	5.5	200	500	400	225
500/225	50	35		118		5.5		500	500	
630/225	50	50		94		5.5		630	630	
400/225	60	25		148		7.0		500	400	
500/225	60	35		118		7.0		500	500	
630/225	60	50		94		7.0		630	630	
400/225	80	25		148		9.0		500	400	
500/225	80	35		118		9.0		500	500	
630/225	80	50		94		9.0		630	630	
400/280	100	25	3.1	148	23	6.5	250	500	400	280
500/280	100	35		118		6.5		500	500	
630/280	100	50		94		6.5		630	630	
800/280	100	90		74		6.5		800	800	
400/280	120	25		148		7.5		500	400	
500/280	120	35		118		7.5		500	500	
630/280	120	50		94		7.5		630	630	
800/280	120	79		74		7.5		800	800	
500/315	150	35	3.1	118	28	7.5	300	500	500	315
630/315	150	50	3.1	94		7.5		630	630	
800/315	150	75	3.1	74		7.5		800	800	
500/315	200	30	3.4	130		9.0		500	500	
630/315	200	45	3.4	103		9.0		630	630	
800/315	200	57	3.4	81		9.0		800	800	
630/400	200	56	3.1	94	33	5.5	370	630	630	400
800/400	200	71		74		5.5		800	800	
630/400	250	46		94		6.5		630	630	
800/400	250	59		74		6.5		800	800	
630/450	300	39	3.1	94	37	7.0	400	630	630	450
800/450	300	50	3.4	74		7.0		800	800	
630/700	400	35		103	2x28	18.0	650	630	630	700
800/700	400	57		81		18.0		800	800	
630/800	500	27	3.1	94	2x33	13.0	750	630	630	800
800/800	500	46		74		13.0		800	800	
630/900	500	27	3.1	94	2x37	11.0	850	630	630	900
800/900	500	46	3.1	74		11.0		800	800	
630/900	600	19	3.1	94		14.0		630	630	
800/900	600	33	3.1	74		14.0		800	800	
630/1200	800	13	3.1	94	3x33	21.0	1100	630	630	1200

Technical design may be subject to changes!
The capacity values specified above are based on cereal grains with a bulk weight of $\gamma = 0.75$ t/m^3.

Elevators
Dimensions

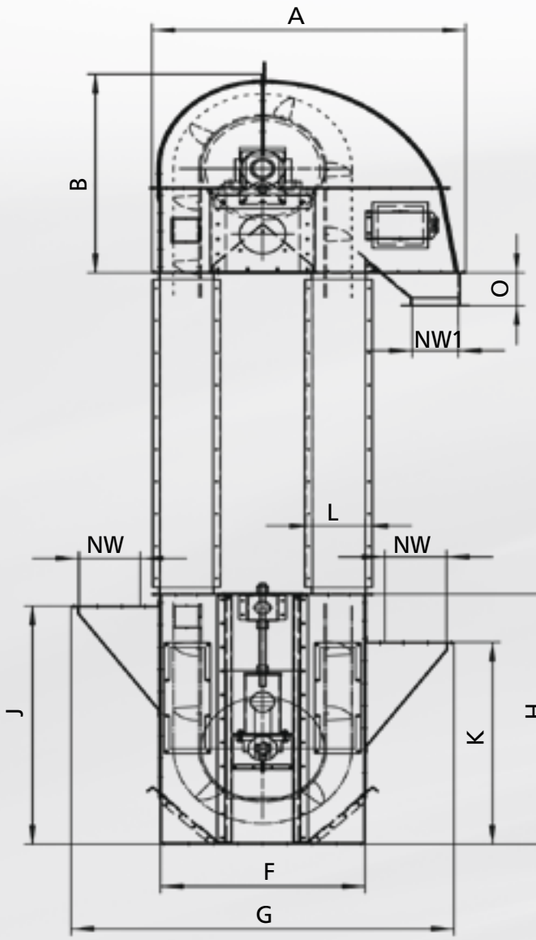

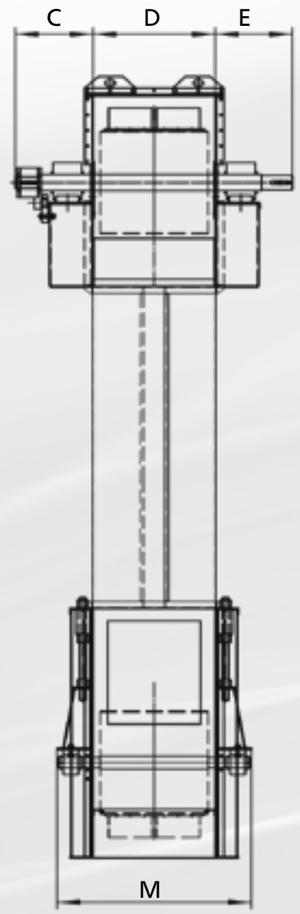

Type	Dimensions of elevators (mm)																
	Head + foot sheet thickness design		Single components														
	Steel	1.4301	A	B	C	D	E	F	G	H	J	K	L	M	NW 1)	NW1 1)	O 1)
400/140	3	3	1100	788	179	180	170	696	1206	970	927	782	182	334	150	150	130
400/180	3	3	1223	873	184	236	172	748	1358	1083	1030	870	208	388	200	200	200
500/180	4	3	1335	984	180	236	182	848	1458	1154	1111	951	208	396	200	200	145
630/180	4		1475	1119	202	236	232	978	1588	1242	1199	1034	208	366	200	200	145
400/225	3	3	1366	938	198	274	195	810	1520	1196	1153	968	238	430	250	200/250	230/180
500/225	4	3	1478	1048	210	274	247	910	1620	1272	1229	1054	238	450	250	200/250	230/180
630/225	4		1621	1194	277	274	304	1040	1750	1360	1317	1154	238	422	250	200/250	180/230
400/280	4	4	1516	1023	209	322	231	850	1700	1309	1274	1084	274	500	300S	250	280
500/280	4	3	1625	1123	283	322	331	950	1800	1359	1324	1134	274	500	300S	250	280
630/280	4		1754	1253	290	322	338	1080	1930	1424	1389	1199	274	470	300S	250	280
800/280	6		2055	1514	363	321	385	1250	2100	1576	1529	1330	274	578	300S	250	280
500/315	4	3	1633	1114	290	395	288	970	1820	1408	1364	1164	279	635	300S	250/300S	280/230
630/315	4	3	1782	1260	317	395	336	1100	1950	1489	1446	1240	279	543	300S	250/300S	280/230
800/315	6		2055	1514	361	394	385	1250	2100	1576	1529	1330	279	650	300S	250/300S	280/230
630/400	6		2012	1427	347	480	388	1214	2242	1809	1743	1415	354	708	334	334	320
800/400	6		2182	1573	450	480	500	1384	2412	1943	1846	1682	354	948	334	334	320
630/450	6		2000	1420	347	590	388	1198	2426	1776	1670	1420	328	818	416	416	295
800/450	6		2178	1608	455	590	505	1368	2576	1943	1853	1689	328	1058	416	416	295
630/700	6		1854	1387	363	794	418	1145	2379	1756	1682	1453	340	1262	416	416	600
630/800	6		2054	1434	363	900	418	1236	2468	1863	1768	1497	378	1368	416x714	x 2)	x 2)
800/700	6		2039	1542	505	794	500	1330	2568	1943	1849	1569	340	1262	416	416	600
630/900	6		2054	1434	363	1000	418	1236	2396	1863	1768	1497	378	1468	400x800	x 2)	x 2)
800/800	6		2216	1574	529	900	500	1406	2468	1943	1849	1569	378	1368	416x714	x 2)	x 2)
800/900	6		2216	1574	529	1000	500	1406	2566	1943	1849	1569	378	1468	400x800	x 2)	x 2)
630/1200	6		2028	1427	363	1280	418	1214	2374	1850	1791	1463	350	1748	400x1140	x 2)	x 2)

Type	Dimensions of double elevators (mm)																
	Head + foot sheet thickness design		Single components														
	Steel	1.4301	A	B	C	D	E	F	G	H	J	K	L	M	NW 1)	NW1 1)	O 1)
D400/140	3		1100	788	179	427	170	696	1206	970	927	782	182	581	150	150	130
D400/180	3		1223	873	184	539	172	748	1358	1083	1030	870	208	691	200	200	200
D400/225	3		1366	938	198	615	195	810	1520	1196	1153	968	238	771	250	200/250	230/180
D500/225	4		1478	1051	210	615	247	910	1620	1272	1229	1054	238	791	250	200/250	230/180
D500/280	4		1625	1123	283	721	331	950	1800	1359	1324	1134	274	899	300S	250	280

Technical design may be subject to changes!

1) Dimensions of other nominal widths according to an extra dimension sheet

2) Dimensions have to be defined in accordance with the site situation

Trough chain conveyors

The particularly rugged handling and conveying systems!

Trough chain conveyors are always a good choice for handling particularly delicate products:

- Extremely gentle product handling thanks to an enclosed product layer.
- Bulk products are handled in a sealed trough for outstanding environment-friendliness and effective avoidance of dust and odour nuisances.
- Handling is possible in both the lower and the upper trough sections, or in both simultaneously. Trough chain conveyors can also be used as circulating conveyors.

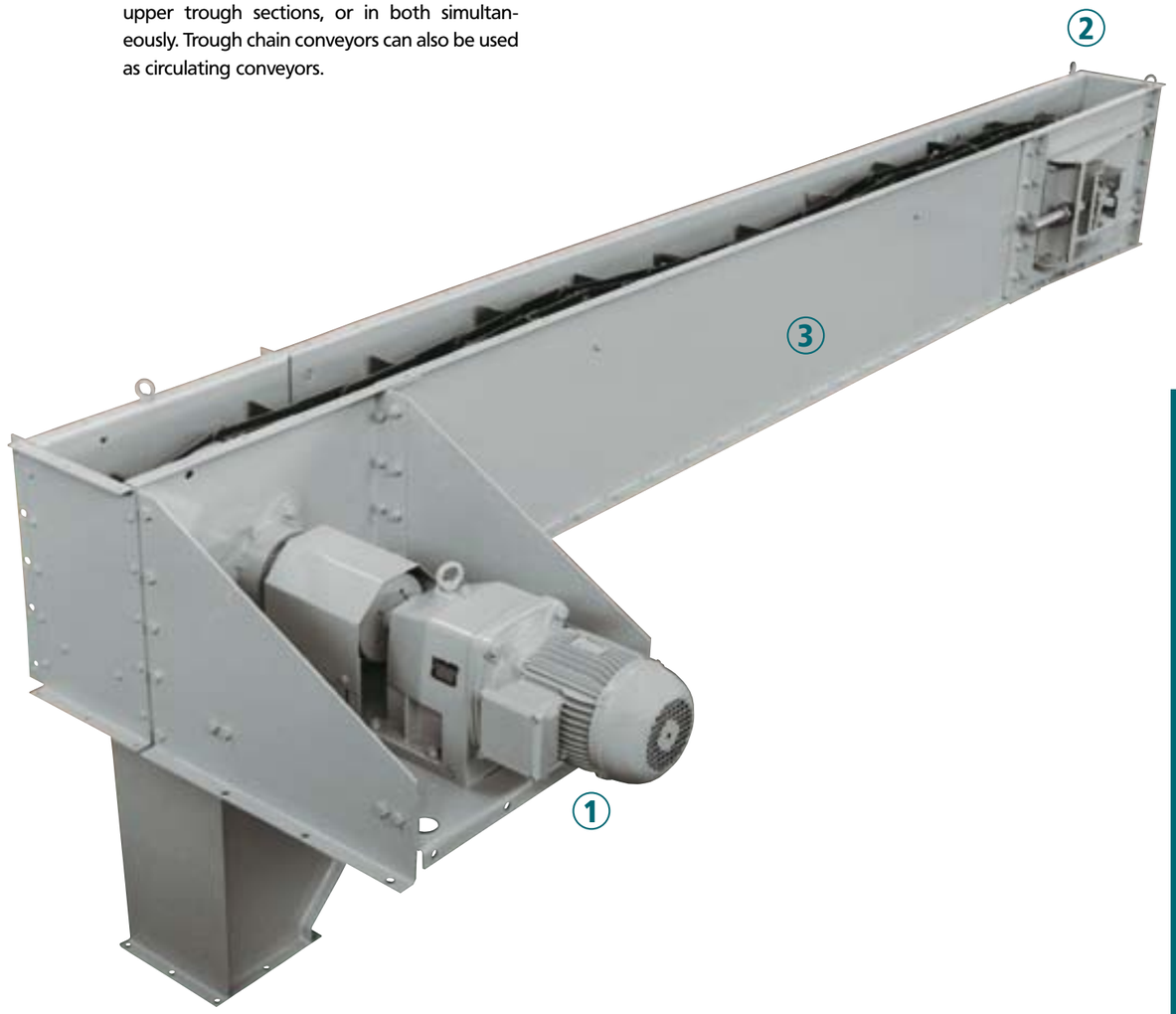

Trough chain conveyors

Product design

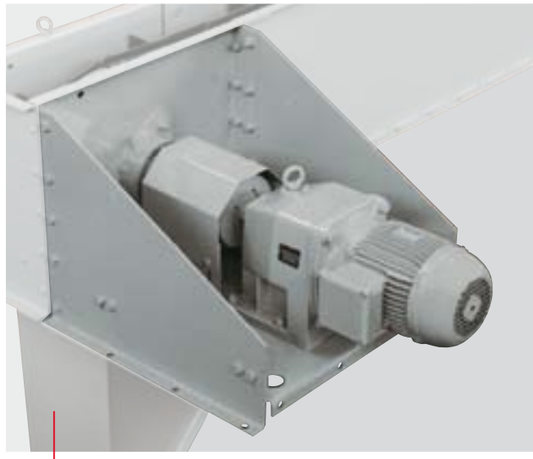

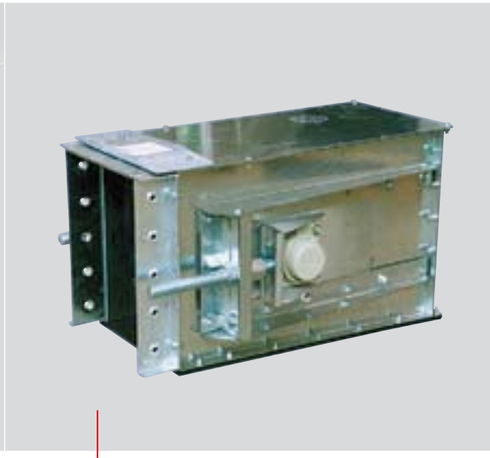

1 Drive station

Generously dimensioned drive unit with reserve capacity for output peaks. Drive unit with flexible coupling and gear motor. Overflow safety device with choke flap and limit switch; sturdy motor support.

2 Tensioning station

with spindle tensioning device for the chain (with speed monitor on request)

3 Chain and trough

- high-quality plate link chain in quality C45
- hardened bolts and bushes in quality C15
- integrated clean-out plastic strippers for residue discarding
- idlers with ball bearings

Troughs are available in 3 different versions:

Version 1: with wearing rail in quality C45

Version 2: with plastic bottom for low-noise and low-wear conveying

Version 3: with Rhino Hyde and guide bar (not shown)

Version 1

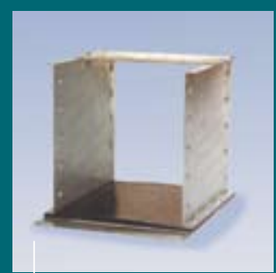

Version 2

Trough chain conveyors
Accessories

A wide range of accessories and extras is available for all trough chain conveyors. The modular design allows a flexible and individual layout of the spouting systems and makes assembly easier than ever before, thus reducing assembly hours considerably!

Trough for intake trough chain conveyors
with sturdy roof and lateral inlets

Outlet slide
pneumatically operated

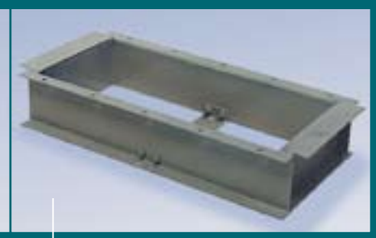

Trough chain conveyor inlet

Trough chain conveyor drive
with infinitely variable geared motor – particularly suited for intake conveyors

Outlet slide
electrically operated

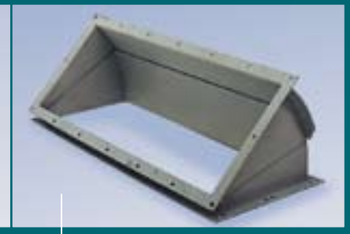

Adjusting segment 30-60°

Outlet slide
with rack and pinion for manual operation

Outlet hopper
with round pipe transition piece

Lateral inlet
with capacity regulating valve

Trough chain conveyors
Special designs

In addition to our standard trough chain conveyors we also offer a wide range of special designs for all types of bulk goods used in many different sectors. Below please find a few examples:

Distribution/Discharge conveyor
for automated flat storage warehouses

Movable loading trough chain conveyor

Trough chain conveyors

Dimensions

Type	Dimensions (mm)												
	Single components												
	A	B	C	D	E	F	G	J	K	L	M	N	O
T 16	160	226	330	410	301	190	155	452	340	648	103		589
T 20	200	266	330	430	341	190	175	452	380	648	103		589
T 20 H	200	266	446	546	341	210	180	577	392	773	121		714
T 25	250	316	446	571	391	210	205	577	442	773	121		714
T 30	310	376	446	601	451	210	235	577	502	773	121		714
T 30 V	310	376	446	601	451	210	279	885	502	773	121		714
T 40	400	466	446	646	541	210	280	577	592	773	121		714
T 40 V	400	466	446	646	541	210	324	885	592	773	121		714
T 40 H1	400	480	552	755	541	240	300	885	630	905		412	714
T 40 H2	400	480	552	755	541	240	324	885	630	905		412	714
T 40 H3	400	480	552	755	541	240	351	885	630	905		412	714
T 50 H1	500	608	643	893	712	306	376	973	756	1204		470	839
T 50 H2	500	608	643	893	712	306	376	973	756	1204		470	839
T 50 H3	500	608	643	893	712	306	401	973	776	1204		470	839
T 50 H4	500	608	643	893	712	306	513	973	776	1204		470	839
T 60 H1	600	708	643	943	812	306	426	973	856	1204		470	839
T 60 H2	600	708	643	943	812	306	426	973	856	1204		470	839
T 60 H3	600	708	643	943	812	306	451	973	876	1204		470	839
T 60 H4	600	708	643	943	812	306	563	973	876	1204		470	839
T 80 H1	800	908	643	1043	1012	306	526	973	1056	1204		470	839
T 80 H2	800	908	643	1043	1012	306	526	973	1056	1204		470	839
T 80 H3	800	908	643	1043	1012	306	551	973	1076	1204		470	839
T 80 H4	800	908	643	1043	1012	306	663	973	1076	1204		470	839

Technical design may be subject to changes!
The capacity values specified above are based on cereal grains with a bulk weight of $\gamma = 0.75$ t/m³.

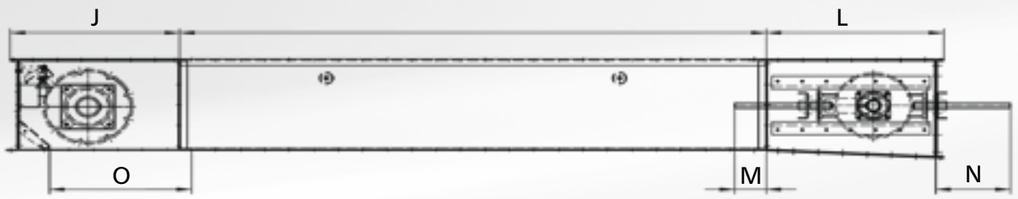

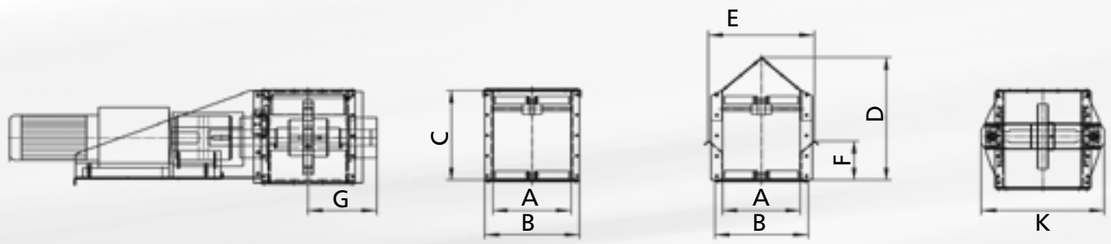

Trough chain conveyors

Technical data

Type	Technical data												
	Conveying capacity (t/h) for v=					Motor power (KW)	Length ($L_{fmax\ m}$)	Cross section (A m²)	Conveying chain			Chain wheel	
	0.4 m (sec)	0.5 m (sec)	0.6 m (sec)	0.65 m (sec)	0.75 m (sec)				Type	Pitch	Chain traction	Z	D_t
T 16	30					-5.5	75		35/5	125	15000	6	250
T 20	40					-5.5	60	0.041	35/5	125	15000	6	250
T 20 H	48	60				-15	81	0.062	50/6	150	19000	7	345.75
T 25	64	80				-15	65	0.078	50/6	150	19000	7	345.75
T 30	96	120				-15	48	0.096	50/6	150	19000	7	345.75
T 30 V	96	120				-22	70	0.096	50/8	150	30000	7	375.75
T 40	120	150				-15	39	0.124	50/6	150	19000	7	345.75
T 40 V	120	150				-22	58	0.124	50/8	150	30000	7	345.75
T 40 H1	133	166	200			-15	33	0.144	50/6	150	19000	9	438.75
T 40 H2	133	166	200			-22	48	0.144	50/8	150	30000	9	438.75
T 40 H3	133	166	200			-30	62	0.144	60/8	150	42000	9	438.75
T 50 H1	200	230	280	300		-15	25	0.215	50/8	150	19000	10	485.4
T 50 H2	200	230	280	300		-22	36	0.215	50/8	150	30000	10	485.4
T 50 H3	200	230	280	300		-30	47	0.215	60/8	150	42000	10	485.4
T 50 H4	200	230	280	300		-45	61	0.215	70/12	150	70000	10	485.4
T 60 H1	220	280	330	375	420	-15	19	0.258	50/10	150	19000	10	485.4
T 60 H2	220	280	330	375	420	-22	27	0.258	50/10	150	30000	10	485.4
T 60 H3	220	280	330	375	420	-30	36	0.258	60/10	150	42000	10	485.4
T 60 H4	220	280	330	375	420	-45	49	0.258	70/12	150	70000	10	485.4
T 80 H1	300	370	440	480	600	-37	27	0.368	50/8	150	35000	10	485.4
T 80 H2	300	370	440	480	600	-55	41	0.368	50/8	150	60000	10	485.4
T 80 H3	300	370	440	480	600	-75	55	0.368	60/8	150	77000	10	485.4
T 80 H4	300	370	440	480	600	-110	70	0.368	70/12	150	133000	10	485.4

Technical design may be subject to changes!
The capacity values specified above are based on cereal grains with a bulk weight of $\gamma = 0.75$ t/m³.

KW	Motor power	**D_t**	Pitch diameter (mm)
A	Operating cross section (m²)	**Q**	Conveying capacity (t/h)
Pitch	Pitch (mm)	**v**	Conveying speed (m/sec)
Chain traction	(N)	**L_{fmax}**	max. conveying length (m)
Z	Number of teeth	**γ**	Bulk weight (t/m³)

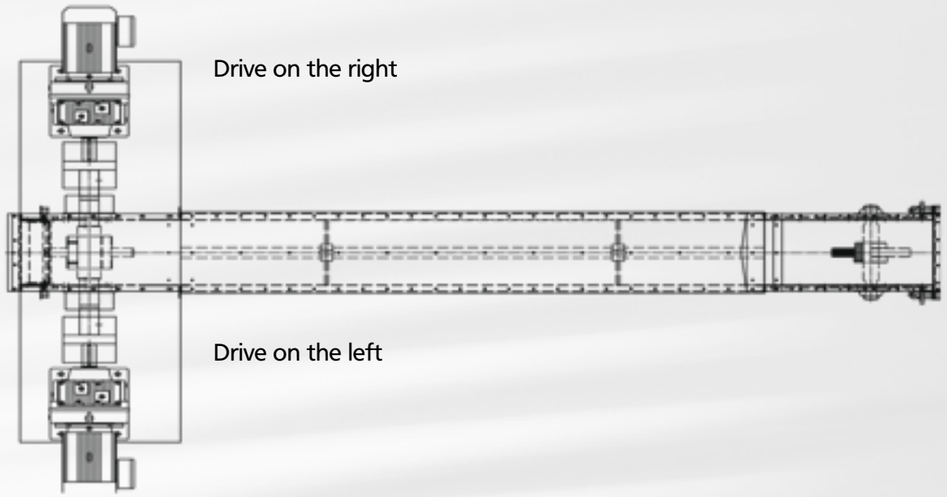

Screw conveyors

Wide variety of uses – unchanging quality

Screw conveyors offer an enormous range of application possibilities – virtually without compromise.

In process engineering, technical processes such as e. g. mixing, heating, and moistening, cooling can be effectively combined with handling.

Important features

- Dust-free and odourless handling due to the possibility of completely sealing off the trough
- Simple integration into an overall system since the product can be charged and discharged at any point
- Space-saving design

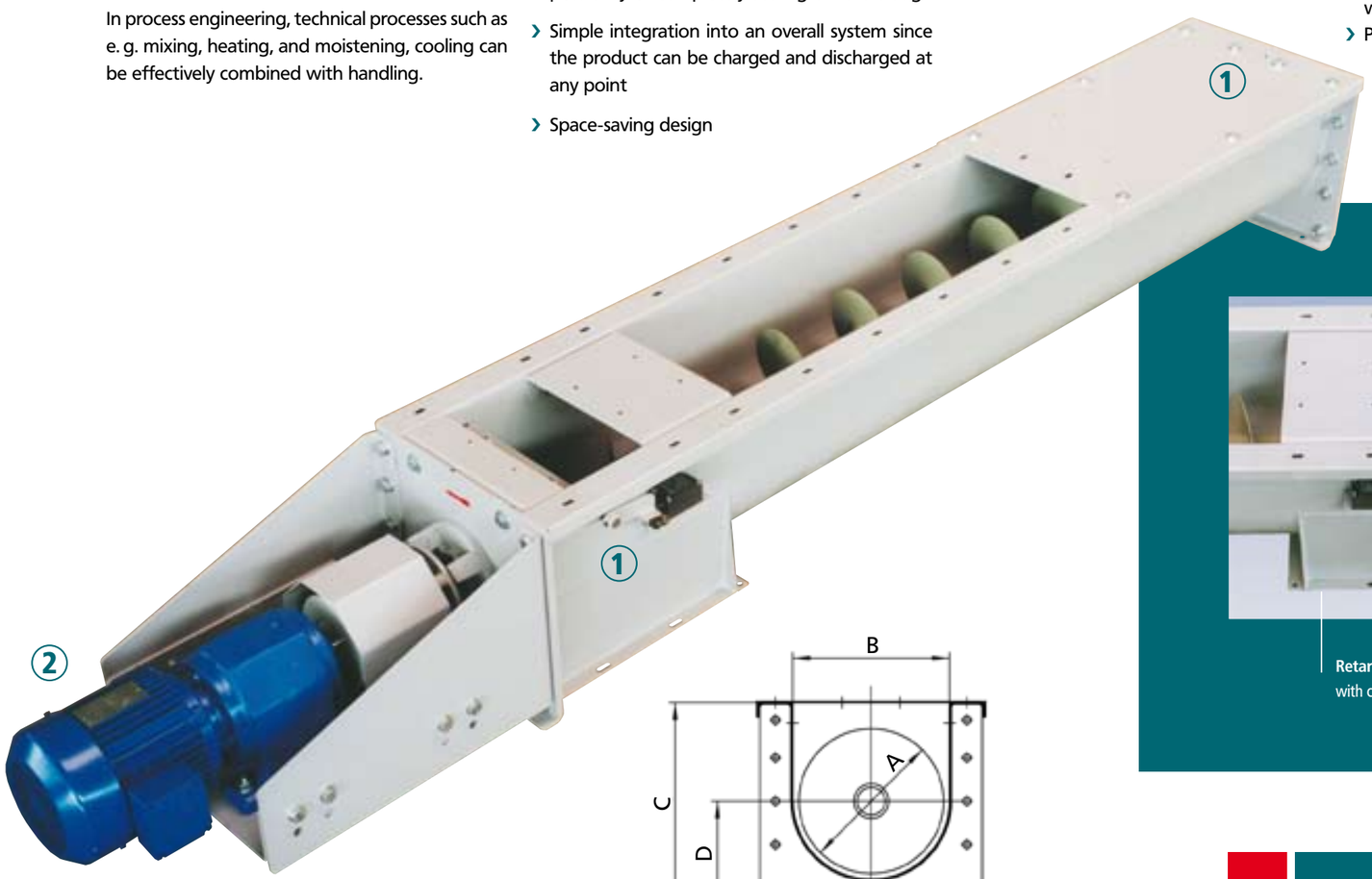

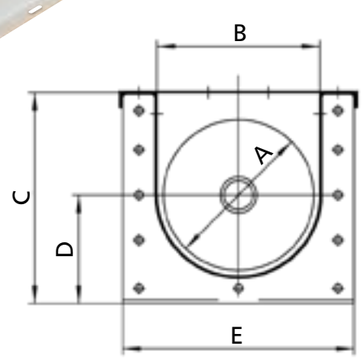

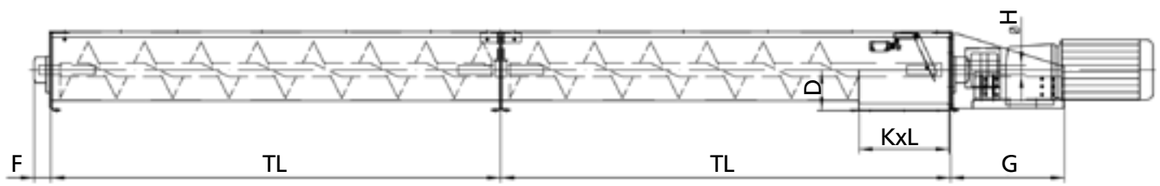

TL = available trough lengths: 1496 mm, 1746 mm, 1996 mm, 2246 mm, 2496 mm, 2746 mm, 2996 mm.

Screw conveyors

Trough screw conveyors

Range of application – materials

- Galvanized sheet steel for outdoor use
- Stainless steel for the food industry and wet processing
- Powder-coated for indoor use

1 Drive- and outer bearing
with flange type bearing. Optionally available with pedestal bearing and inserted stuffing box sealing.

2 Direct drive
by means of flexible coupling and geared motor or – on request – with infinitely variable geared motor.

Retarding flap
with contact switch to avoid breakdown

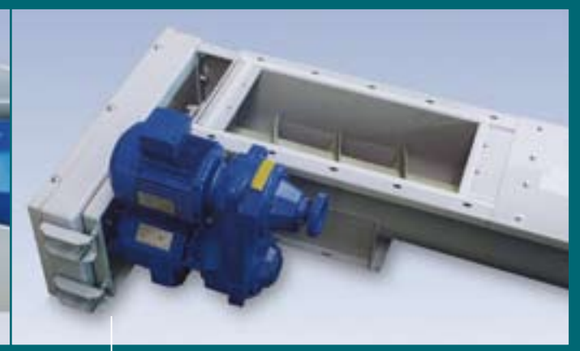

Indirect drive

Type	Technical data									Dimensions									
	Capacity (t/h)	RPM (1/min)	Ascending slope (mm)	Drive pin (mm)	Screw blade (mm)	Drive pin (mm)	Intermediate bearing (mm)	End bearing (mm)	Trough + cover (mm)	Single components (mm)									
										A	B	C	D	E	F	G	H	K	L
150	15	235	150	60.3 x 6.3	3	40	40	40	2	150	170	240	140	284	75	506	40	300	150
200	25	150	200	60.3 x 6.3	3	40	40	40	2	200	220	280	155	334	75	506	40	300	200
250	40	120	250	60.3 x 6.3	3	40	40	40	2	250	270	350	180	384	75	506	40	400	250
315	60	100	315	76.1 x 6.3	3	50	45	50	3	315	335	400	220	419	83	656	50	400	300
400	100	85	355	114.3 x 6.3	3	60	60	60	3	400	426	514	290	526	89	772	60	500	400
500	160	75	400	133.0 x 6.3	3	70	70	70	3	500	525	625	345	643	118	898	70	600	500
630	250	67	500	168.3 x 6.3	3	100	100	100	3	630	660	775	400	812	145	968	100	750	630

Technical design may be subject to changes!
The capacity values specified above are based on cereal grains with a bulk weight of $\gamma = 0.75$ t/m³ for horizontal handling.

Screw conveyors
Tube screw conveyors

Tube screw conveyors are a multi-purpose handling system for the clean and dust-free conveying of a wide range of products. Particularly suited for inclined/vertical handling with standard or conical thread.

We offer a wide range of special designs for virtually every purpose of use.

Depending on application, we use welded thick-wall spouts according to DIN 2448 or DIN 2458.

On request we also use galvanized or stainless steel.

① **Dust tight bearings**
with stuffing box sealing or additional bearing louver with shaft sealing ring ensure operational safety and long service life.

② **Direct drive**
with flexible coupling and gear motor.

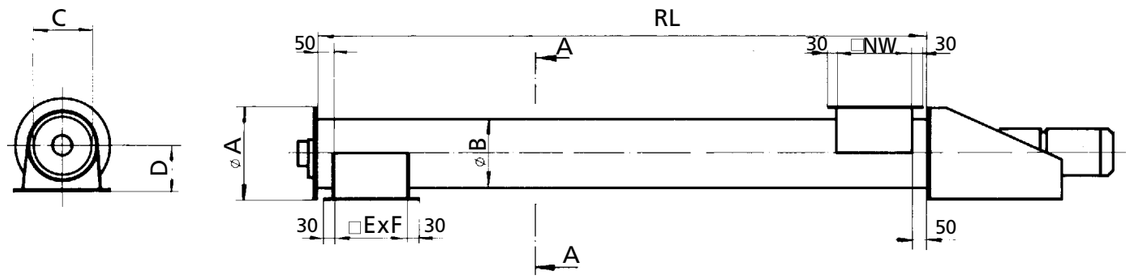

RL = available tube lengths: 496 mm, 996 mm, 1496 mm, 1996 mm, 2496 mm, 2996 mm.

Type	Technical data									Dimensions					
	Capacity (t/h)	RPM (1/min)	Ascending slope (mm)	Internal pipe (mm)	Screw blade (mm)	Drive pin (mm)	Intermediate bearing (mm)	End bearing	Trough + cover (mm)	Single components (mm)					
										A	B	C	D	E	F
150	16	200	150	60.3 x 6.3	3	40	40	40	2	246	174	150	100	300	150
200	25	170	200	60.3 x 6.4	3	40	40	40	2	296	224	200	125	300	250
250	60	145	250	60.3 x 6.5	3	40	40	40	2	346	274	250	150	400	250
300	80	115	300	76.1 x 6.3	3	50	50	50	2	396	324	300	200	400	300
400	120	80	400	114.3 x 6.3	3	60	60	60	3	510	436	400	250	400	400

Technical design may be subject to changes!
The capacity values specified above are based on cereal grains with a bulk weight of $\gamma = 0.75$ t/m^3 for horizontal handling.

Screw conveyors
Special designs

In response to the requirements of the cereal grain, compound feed, food, construction materials and cement industry and of recycling operations, our design engineers have developed a wide range of special designs

Our experienced engineers are committed to solving our customers' individual problems now and in the future.

Dosing screw conveyor
with bagging unit for bagging of small quantities in the building materials industry

Discharging screw conveyor
for hard-flowing products, e. g. in plaster production

Dosing screw conveyor
with infinitely variable drive, special bearing sealing via compression gland

Tube screw conveyor
particularly heavy-duty design, special bearing sealing for the cement and building materials industry

Tube screw conveyor
for the transport of mealy products, with easy to maintain intermediate bearings

Loading screw conveyor for flour
movable, with pneumatically actuated pressing device for low-dust loading

Dampening screw
for moistening cereal grains

Conveyor belts
A powerful link in handling and conveying systems

Belt conveyor systems are the continuous handling means with the highest performance. Regardless whether delicate or corrosive products are handled. Belt conveyors are reliable and gentle, but above all cost-effective, energy-wise and flexibly product carriers.

Important features

- High performance, depending on the belt width and the belt speed
- Conveyor belts can be effectively integrated in automation concepts
- The traction carriers, which are embedded in rubber or plastic, are effectively protected against damage and moisture

Conveyor belt installation
length 85 m, capacity 300 t/h

Tripper
with electrical displacement

Conveyor belts
U-section belt conveyors

U-section belt conveyors have been specially developed for rough applications – such as e. g. for the building materials industry, where sturdiness and high load capacities matter. Drives, bearings, idlers and belts are therefore particularly sturdy.

The open design ensures simple and trouble-free maintenance.

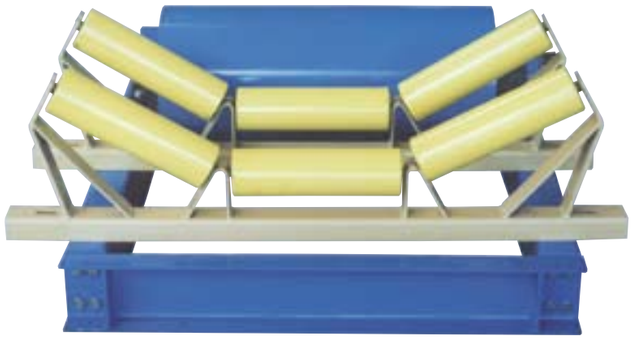

Solid U-profile design

- With clamp-fitted 3-piece support structure
- Maintenance-free carrying rollers running in ball bearings
- Actuation via laterally fitted geared motor
- Generously dimensioned conveyor belt
- Conveyor belt resistant against vegetable and animal oils and fats, or optionally against mineral oils and greases

Conveyor belts

U-section belt conveyors: Technical data / Dimensions

Type	Technical data										
	Conveying capacity (t/h) for v =				Belt width (mm)	Max. length (m)	Troughing	Bearing stations		Return rollers	
	1.6 m/s	2.1 m/s	2.6 m/s	3 m/s				Diameter (mm)	Distance (mm)	Diameter (mm)	Distance (mm)
P 650	120	150	200		650	250	3-piece 45°	63.5	1200	63,5 / 108	3000
P 800	200	250	300		800	250	3-piece 45°	89	1200	89 / 133	3000
P 1000	320	400	500	600	1000	250	3-piece 45°	108	1200	89 / 133	3000
P 1200		600	800	1000	1200	250	3-piece 45°	108	1200	89 / 133	3000
P 1400		900	1100	1300	1400	250	3-piece 45°	133	1200	89 / 133	3000

Technical design may be subject to changes!
The capacity values specified above are based on cereal grains with a bulk weight of $\gamma = 0.75$ t/m³.
Higher capacities available on request!

Type	Dimensions (mm)		
	Single components		
	GB	g	HG
P 650	950	330	830
P 800	1150	365	1005
P 1000	1350	450	1105
P 1200	1600	515	1230
P 1400	1800	585	1330

Technical design may be subject to changes!

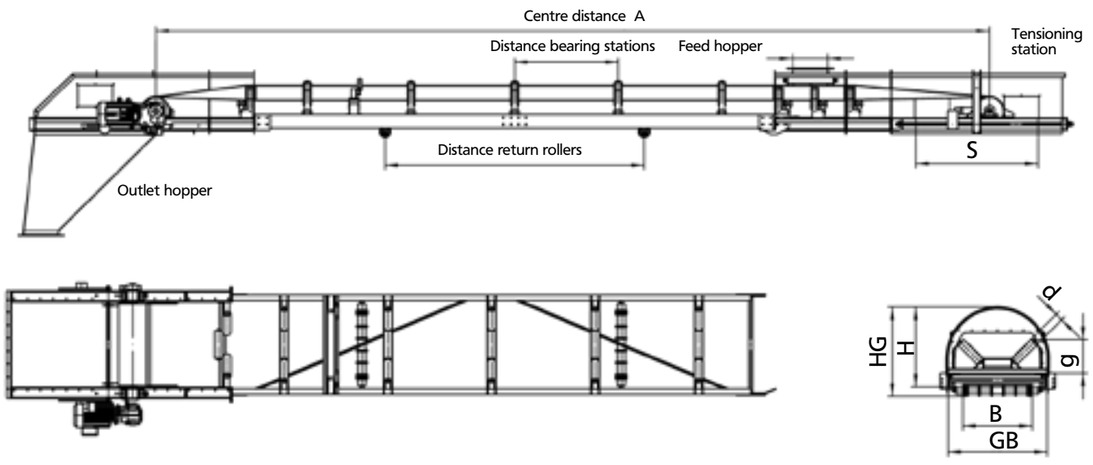

* Length of possible belt tensioning S
S = 1000 mm for A ≤ 60 m
S = 2000 mm for 60 m ≤ A ≤ 120 m
For A > 120 m, weight-loaded belt tensioning stations for S > 2000 mm will be used.

Conveyor belts

Special designs

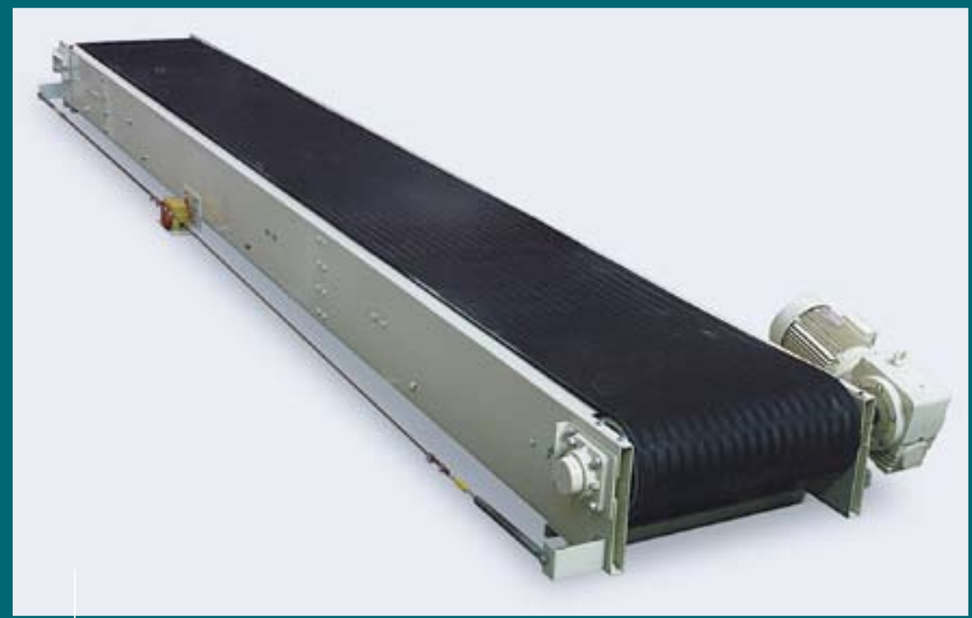

Flat belt
with geared motor for handling bags, with safety pull cord switch

High-capacity thrower belt conveyor
for the storage of granular goods. Made of stainless steel, also suitable for aggressive materials.

Troughed belt conveyor
with undercarriage height adjustment, for handling bulk goods of all types

Conveyor belts

Stressed-skin conveyor belts

Stressed-skin conveyor belts have a modular design. The fully preassembled segments and light-weight construction make this design a particularly cost-effective investment. Safe and reliable transportation thanks to the laterally sealed belt framework.

1 Tensioning station with belt tensioning by means of spindle tensioning device
weight loaded tensioning station for long belts

2 Drive station
with maintenance free drum type motor

Preassembled segment
in lightweight construction

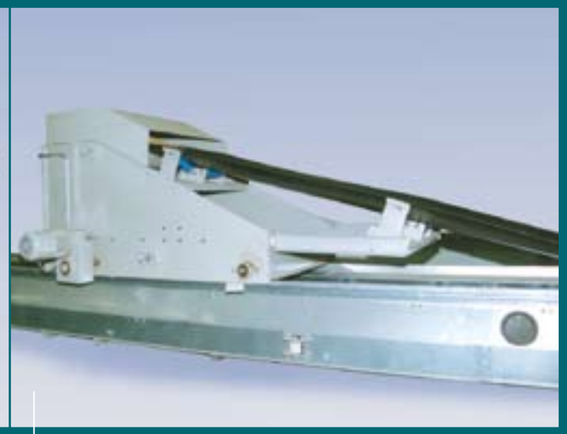

Tripper
with electrical displacement

Conveyor belts

Stressed-skin conveyor belts: Technical data / Dimensions

Type	Dimensions (mm)										
	Belt width (mm)	Single components									
		a	b	c	d	d_1	e	f	g	h	k
M 500	500	620	370	500	570	800	250	685	275	150	175
MN 650	650	770	370	500	570	800	250	685	275	150	175
M 650	650	770	440	800	750		250	755	275	150	175
M 800	800	980	510	750	1100	1350	300	990	350	150	175

Technical design may be subject to changes!

Type	Technical data							
	Capacity (t/h)	Speed (m/sec)	Belt width (mm)	Troughing	Carrying idlers		Return rollers	
					Diameter (mm)	Distance (mm)	Diameter (mm)	Distance (mm)
M 500	60	1,68	500	2-piece 20°	50	500	63	ca. 1250
MN 650	120	1,68	650	3-piece 20°	50	500	63	ca. 1250
M 650	120	1,68	650	2-piece 20°	50	500	63	ca. 1250
M 800	200	2,09	800	3-piece 20°	63	500	63	ca. 1250

Technical design may be subject to changes!
The capacity values specified above are based on cereal grains with a bulk weight of $\gamma = 0.75$ t/m³ for horizontal handling.

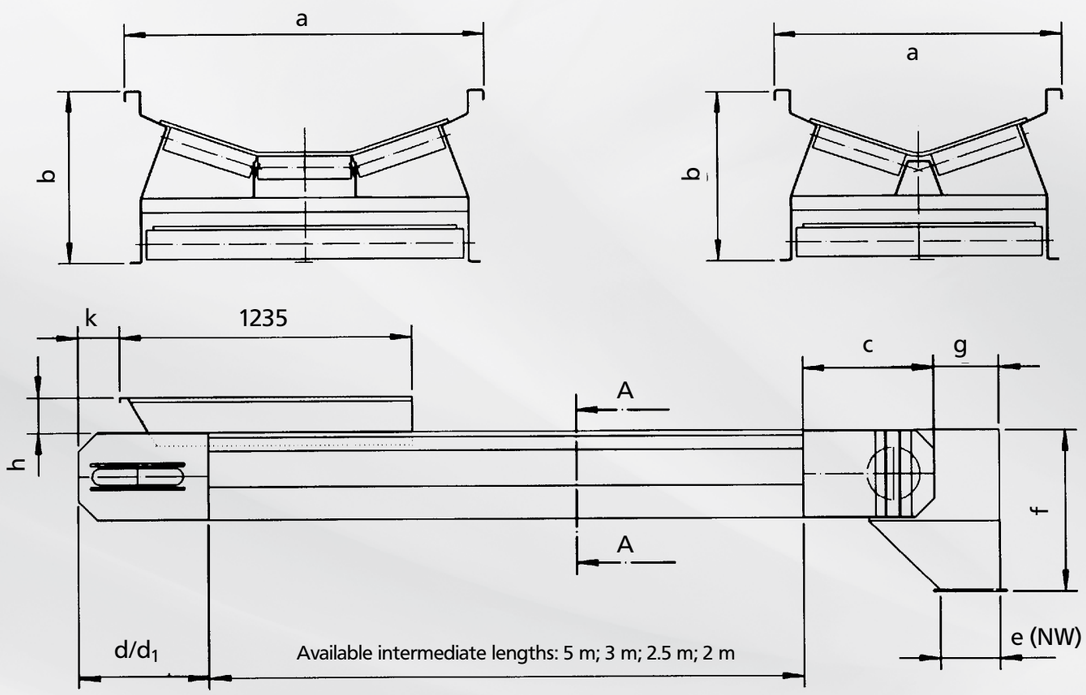

Pellet handling data

Elevators, trough chain conveyors, conveyor belts

Elevators

Type	Performance data		Technical data		
	Conveying capacity (t/h)	Belt speed (m/s)	Buckets		Height (m)
			Size	Quantity	
T 280	40	2.1	Starco 23	9 Units/m	42
T 400	80	2.1	Starco 37	9 Units/m	42
T 450	120	2.1	Starco 28	9 Units/m	42

Trough chain conveyors

Type	Performance data		Technical data		
	Conveying capacity (t/h)	Max. motor power (KW)	Conveying chain		Max. length
			Type	Pitch (mm)	
20H	40	9.2	50/6	150	80
40	80	9.2	50/6	150	50
40-2	80	15	50/8	150	70
50	120	9.2	50/8	150	35
50-2	120	15	50/8	150	50

Conveyor belts

Type	Performance data		Technical data	
	Conveying capacity (t/h)	Speed (m/s)	Belt width (mm)	Troughing
MN 650	40	1.68	650	18°
M 800	bis 120	1.68	800	25°

Technical design may be subject to changes!
All capacity values specified above are based on pellets with a bulk weight of 0.6 m/t³.

Read more about

Elevators	on pages 6-13
Trough chain conveyors	on pages 14-19
Conveyor belts	on pages 24-31

Residue-free handling and conveying systems

Special elevator and trough chain conveyor designs

Our special elevator and trough chain conveyor designs allow virtually residue-free handling. Minimized gaps and a geometrically optimized layout of the conveyor components leave virtually no spaces or dead angles where residue might accumulate. This innovation allows compliance with the hygiene directives, especially for the chemical, animal feed and food industries.

The advantages of residue-free handling and conveying systems

- Hygienic conveying
- No residues
- No contamination

Materials

Material varieties

Powder coating
Powder coating is a standard procedure at Schmidt-Seeger. This type of surface refinement is always advisable when working surfaces must be particularly smooth and resistant.

Galvanizing
Hot-galvanized sheet metal is chosen specially for outdoor use under varying weather conditions. This ensures maximum corrosion protection and a long service life at only moderate additional cost.

Stainless steel
Stainless steel sheets are given preference in the food industry. In addition, stainless steel is recommended for handling particularly corrosive products such as e. g. fertilizers or salts.

Our experience for your success

Many years of experience and continuous development work are the basis for high-quality and high-performance products. Handling and conveying systems made by Schmidt-Seeger are economically advantageous and effective.
The product-specific design of the handling equipment guarantees the delivery rates demanded by the customers while ensuring optimum product protection and low reject rates.
The use of state-of-the-art manufacturing technologies such as e. g. welding robots, combined with the use of high-quality, wear-resistant materials ensure long service life. Sophisticated yet uncomplicated designs ensure fast and easy machine assembly and smooth replacement of components if needed.
Safe operation of our machines and plants is our number-one priority. Control mechanisms like run-out monitors, electronic rev meters and integrated reversing locks help prevent accidents. All our designs are explosion-proof in accordance with the ATEX explosion safety directive.

Drying

Processing technology
cleaning machines, seed selector and ultratrieurs

Cooling

Schmidt-Seeger GmbH

92339 Beilngries / Germany, Eichstaetter Strasse 49
Telephone ++49 (0) 8461 70 10, Fax ++49 (0) 8461 70 11 33

73655 Pluederhausen / Germany, Boschstrasse 7
Telephone ++49 (0) 7181 80 05 0, Fax ++49 (0) 7181 80 05 50

04720 Doebeln / Germany, Richard-Koeberlin-Strasse 13
Telephone ++49 (0) 3431 7 04 50, Fax ++49 (0) 3431 70 45 12

info@schmidt-seeger.com
www.schmidt-seeger.com

Rauchbauer und Partner Werbeagentur GmbH

Version 10/2008