REV. 1 / 02.12.14
HHJ/jj
70152GB

SKIOLD A/S
Kjeldgaardsvej 3
DK-9300 Sæby
Denmark
Tel.: +45 99 89 88 87
Fax: +45 99 89 88 77
skiold@skiold.com
www.skiold.com

INSTRUCTION MANUAL

SKIOLD TWIN DRUM CLEANER

TYPE NO. 200126

1.0 TABLE OF CONTENTS

1.0 TABLE OF CONTENTS 2
2.0 FIGURES 2
3.0 WARNING 3
4.0 FUNCTIONAL DESCRIPTION 4
5.0 MOUNTING 5
5.1 Installation Tools 5
5.2 Directions of Erection 5
5.3 Assembly and Erection 6
5.4 Electrical Connection of the Drum Cleaner 6
5.5 Erection of Aspiration Plant 7
6.0 STARTING UP 7
7.0 USER'S MANUAL 7
7.1 Field of Application 7
7.2 Choice of Screen Size 7
7.3 Mounting/Replacement of Screens 8
8.0 MAINTENANCE 9
8.1 Mechanics 9
8.2 Cleaning 9
9.0 ESTABLISHED FAULTS, CAUSE AND REMEDY 10
10.0 DISMANTLING OF THE DRUM CLEANER 10
11.0 TECHNICAL SPECIFICATIONS 11
11.1 Dimensional sketch 11
12.0 EX-ZONE SPECIFICATION 12
13.0 SPARE PARTS LIST 13
13.1 Technical Data 14
14.0 CE/ATEX DECLARATION OF CONFORMITY 15

2.0 FIGURES

Fig. 1 Cleaning principle 4
Fig. 2 Assembly and erection 6
Fig. 3 Replacement of screen step 1 8
Fig. 4 Replacement of screen step 2 9
Fig. 5 Dimensional sketch 11
Fig. 6 Ex-zones 12
Fig. 7 Spare parts drawing 13

3.0 WARNING

At servicing and inside cleaning the electricity should be switched off at the main switch and the switch locked.

The drum cleaner may contain an atmosphere with danger of explosion in the form of a cloud of dust, and therefore the equipment and electrical components placed in the bins must be Ex-marked for use in zone 21 according to unified standards DS/EN 60079-0:2004 og DS/EN 60079-14.

To observe the unified standards concerning dust explosions DS/EN 1127-1 and DS/EN 13463-1, the cover and side plates of the drum cleaner should be mounted during operation.

The drum cleaner may not – without prior contact to the producer – be used for other purposes than described by the producer – which means cleaning of grain and feed products in granulated form. For further information see ”Field of Application” and ”Technical Specifications”.

The drum cleaner should be mounted on a plane, concrete floor with a carrying capacity of min. 7 kg/cm².

Electrical connection MUST be carried out by an authorized electrician, and DS/EN 60079-14 and DS/EN 60204-1 must be observed.

4.0 FUNCTIONAL DESCRIPTION

Fig. 1 Cleaning principle

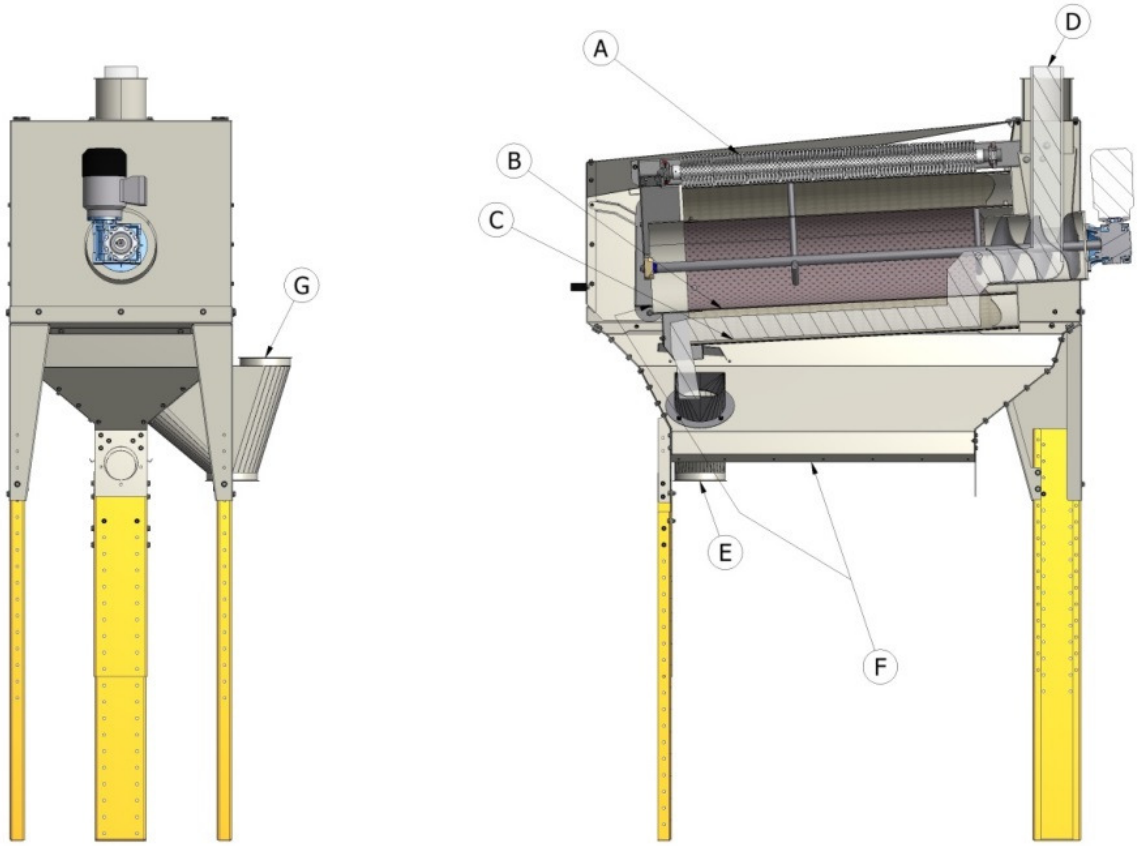

A	Cleaning brush
B	Upper screen
C	Lower screen
D	Uncleaned product
E	Cleaned product
F	Over/under size waste
G	By-pass

Inlet (Uncleaned Product)
The raw material is led to inlet pos. 1 (fig. 7). To achieve a satisfactory cleaning it is important that the material is added in a constant flow. In the inlet the material is collected in a pipe with double auger thread and led into the first rotating screen – in the following called upper screen pos. 3 (fig. 7).

Screen Pos. 3 and 6 (Fig. 7)
The holes of the upper screen should be in a size that allows the raw material to fall through while particles larger than the raw material remain on the screen. Hole sizes of the screen can be seen in chapter "Choice of Screen Sizes" point 7.2.

The holes of the lower screen should be in a size that allows the raw material to remain on the screen while particles smaller than the raw material fall through. Hole sizes of the screen can be seen in chapter "Choice of Screen sizes" point 7.2.

The lower screen is kept clean by means of a circular, revolving brush pos. 7 (fig. 7) preventing waste to close the holes of the screen.

Outlet Pos. 4 and 5 (Fig. 7)
The waste particles – oversize from the upper screen and undersize from the lower screen – are led to the outlet beneath the cleaner, from where they can either be bagged off or transported away. The cleaned raw material is led to the outlet pos. 4 and 5 placed at the side of the cleaner.

5.0 MOUNTING

5.1 Installation Tools

- Hand hammer
- Screw driver with even and recessed head
- Combination wrench 8, 10, 13, 17, 19 mm
- Various Allen keys
- Drilling machine, 10 mm concrete drill
- 10 mm, 12 mm steel drill
- Ladder

5.2 Directions of Erection

The drum cleaner should be mounted on a plane concrete floor with a carrying capacity of min. 7 kg/cm².

The drum cleaner should be placed in a way that transport equipment to and from the drum cleaner can be established in the process line. Be sure that there is space around the cleaner for cleaning and service and for replacing of screens, requiring 1.2 m free space at the end opposite to the gear motor.

The length of the legs can be adapted in steps of 40 mm.

5.3 Assembly and Erection

The drum cleaner is delivered ready-assembled except from cable to el-motor and inlet/outlet.

Place the drum cleaner on the required position and adjust the length of the legs as required (height adjusting area: See dimensional sketch under technical specifications).

Outlet with cleaned product may be placed at right or left side of the cleaner.

Adapt pipe connections to inlet and outlet and possible waste. Then bolt the legs onto the foundation with suitable foundation bolts.

Fig. 2 Assembly and erection

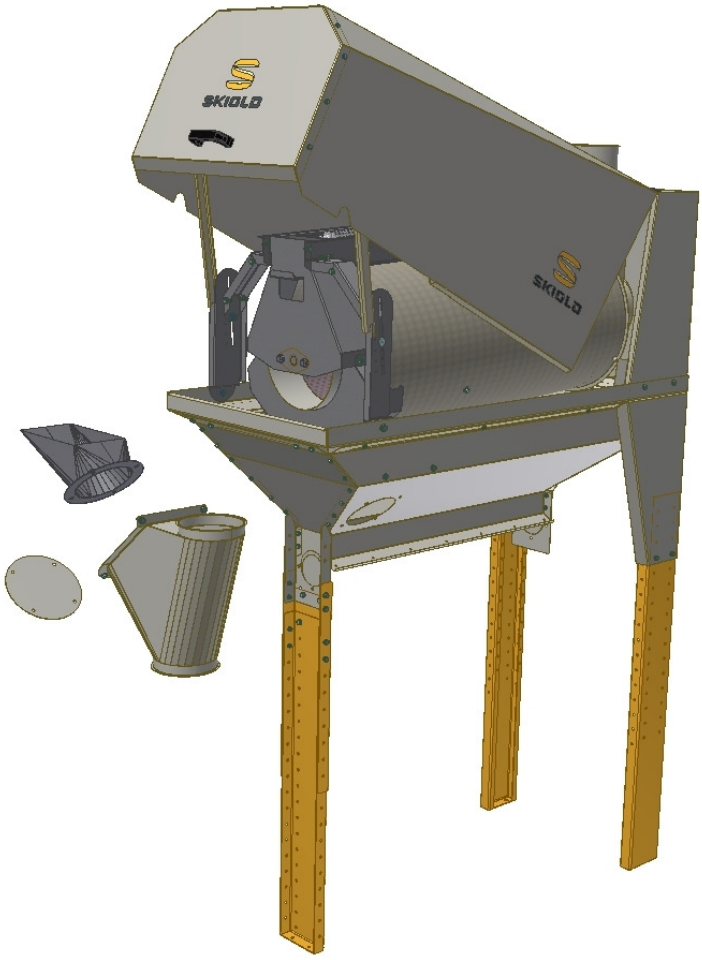

5.4 Electrical Connection of the Drum Cleaner

The motor should be secured by thermal relay and fuse corresponding to the rating plate of the motor.

5.5 Erection of Aspiration Plant

To avoid dust problems in and around the drum cleaner it is recommended to mount an aspiration plant maintaining a low pressure in the cleaner.

We recommend that the aspiration is mounted in the top plate.

The aspiration plant is additional equipment that should be ordered separately. It is recommended to use Ø100 mm pipes for suction and a capacity of app. 700 m^3/hour.

6.0 STARTING UP

Check that there are no foreign bodies in the drum cleaner before starting up.

When the drum cleaner has been operating for approx. 2 hours, check the following:

- Have all bolts been correctly tightened - especially bolts at the screens should be checked?
- Are motor and bearings abnormally hot?
- Is the drum cleaner correctly anchored to the foundation?
- Are there abnormal vibrations/noises in the drum cleaner?

7.0 USER'S MANUAL

7.1 Field of Application

The drum cleaner is suitable for pre-cleaning of grain and grained products to be used for feed production.

In case of any deviations from the above purpose, the manufacturer in beforehand should be consulted for an acceptance. If not, the guarantee lapses.

7.2 Choice of Screen Size

The screen size is adapted to the size of the raw materials to be cleaned and the requirements to the cleaning. For pre-cleaning the following screens can be used:

	Barley/Wheat/ Rye/Oats	Rape	Peas	Maize
	Pre-Cleaning	Pre-Cleaning	Pre-Cleaning	Pre-Cleaning
Upper screen	Ø10-Ø12	Ø6-Ø8 *	Ø 10	Ø 13 - 15 **
Lower screen	Ø 1.5 x 20	Ø 1.0 x 20 *	Ø 1.5 x 20	Ø 1.5 x 20

* Not standard, produced to order.

** Size of maize can vary a great deal. The screen is not standard, but produced to order.

In the chapter concerning spare parts the available screen sizes are stated.

7.3 Mounting/Replacement of Screens

Before replacing the screen, lift the centre shaft into top position and tighten the 2 pcs. carriage bolts (fig. 3). Then remove the bolts/nuts shown (fig. 4). The end plate in the outlet end of the drum cleaner can now be removed. Now unscrew the lower screen and remove/replace it.

To replace the upper screen it is necessary to remove the 3 screw caps between upper and lower screen.

Fig. 3 Replacement of screen step 1

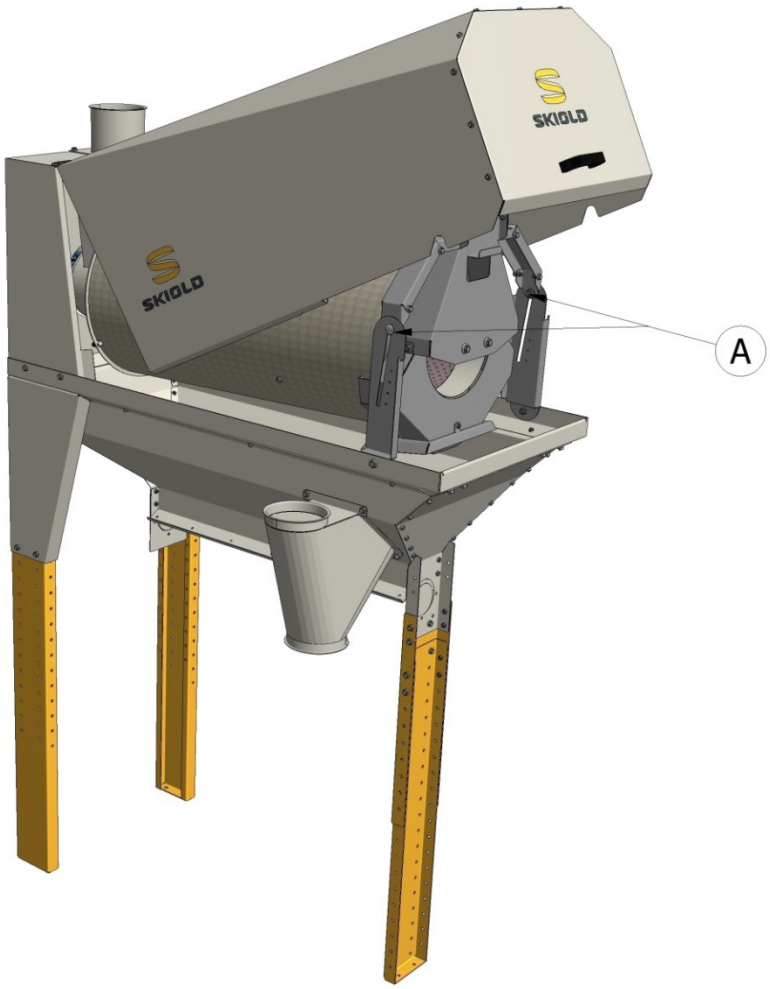

A Raise the screen to top position

Fig. 4 Replacement of screen step 2

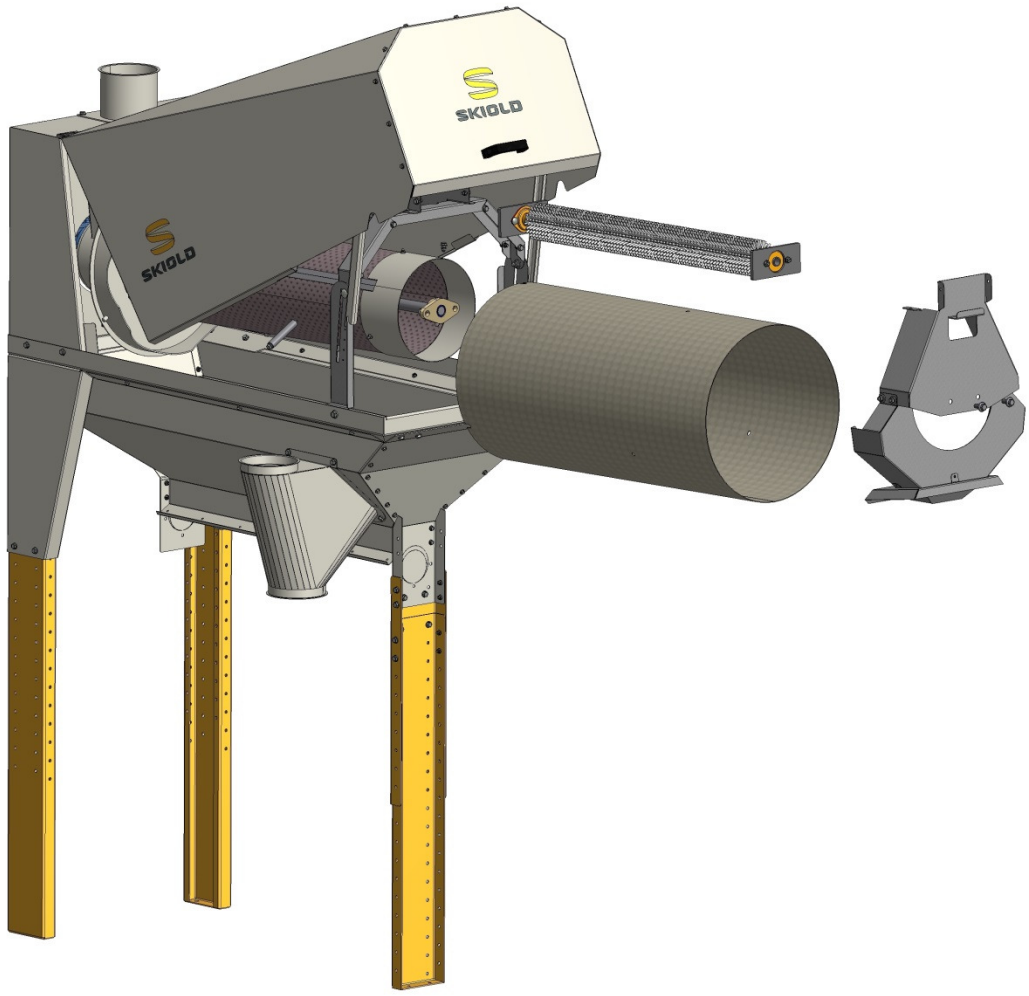

8.0 MAINTENANCE

8.1 Mechanics

The bearings of the drum cleaner are greased at delivery and can be greased afterwards 2 times a year.

After 50 hours of operation check that all bolts are correctly tightened. Afterwards check the bolt tightening min. once a year.

8.2 Cleaning

Note! All cleaning should be carried out in a way that no clouds with danger of explosions are generated. Pressure air is therefore not recommended. Instead use broom or vacuum cleaner.

To ensure necessary cooling and minimize risk of fire the motor should be kept free of dust coating.

Open the cover and clean the drum cleaner as necessary. Intervals of cleaning depend on the materials that are cleaned, and whether dust suction is mounted or not.

Clean the screen regularly for particles attached.

9.0 ESTABLISHED FAULTS, CAUSE AND REMEDY

The Motor Will not Start

- The thermo switch has been released due to overload. Check if the setting is correct. Send for an electrician in case of reiterations.
- The fuse has blown. Replace the fuse. Send for an electrician in case of reiterations.

Abnormal Noise is Heard from the Cleaner

- The bolts attaching the screens have not been correctly tightened. Tighten the bolts.
- There is oversize waste that cannot get out of the upper screen. Remove the waste.
- Check the bearing of the centre shaft for wear. Possibly replace the bearings.

Capacity of the Drum Cleaner is too Low

- The screens have not been adjusted in the correct angle, and the raw material remains on the screens instead of moving forwards. Lower the screens.

There are Impurities in the Cleaned Raw Material

- The holes of the screen have been blocked. Clean these.
- An uncorrect size of screen has been mounted. Replace to the correct size.
- The screens have not been adjusted in the correct angle, and the raw material remains on the screens instead of moving forwards. Raise the screens.

10.0 DISMANTLING OF THE DRUM CLEANER

Dismantling of the drum cleaner takes place in opposite succession than assembly.

We refer to chapter ”Assembly and Erection”.

When scrapping the drum cleaner there are no special demands of disposal method.

11.0 TECHNICAL SPECIFICATIONS

11.1 Dimensional sketch

Fig. 5 Dimensional sketch

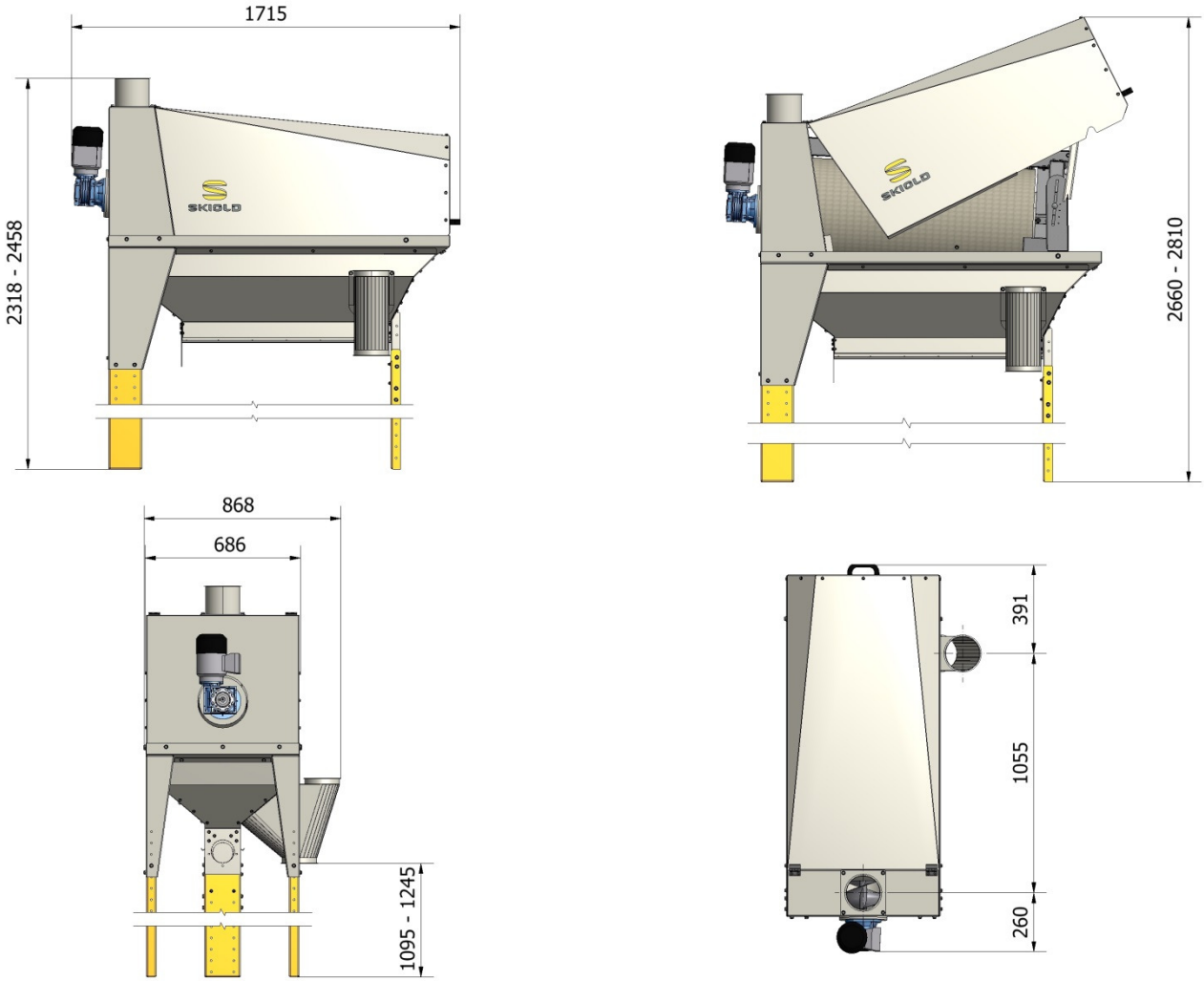

12.0 EX-ZONE SPECIFICATION

Fig. 6 Ex-zones

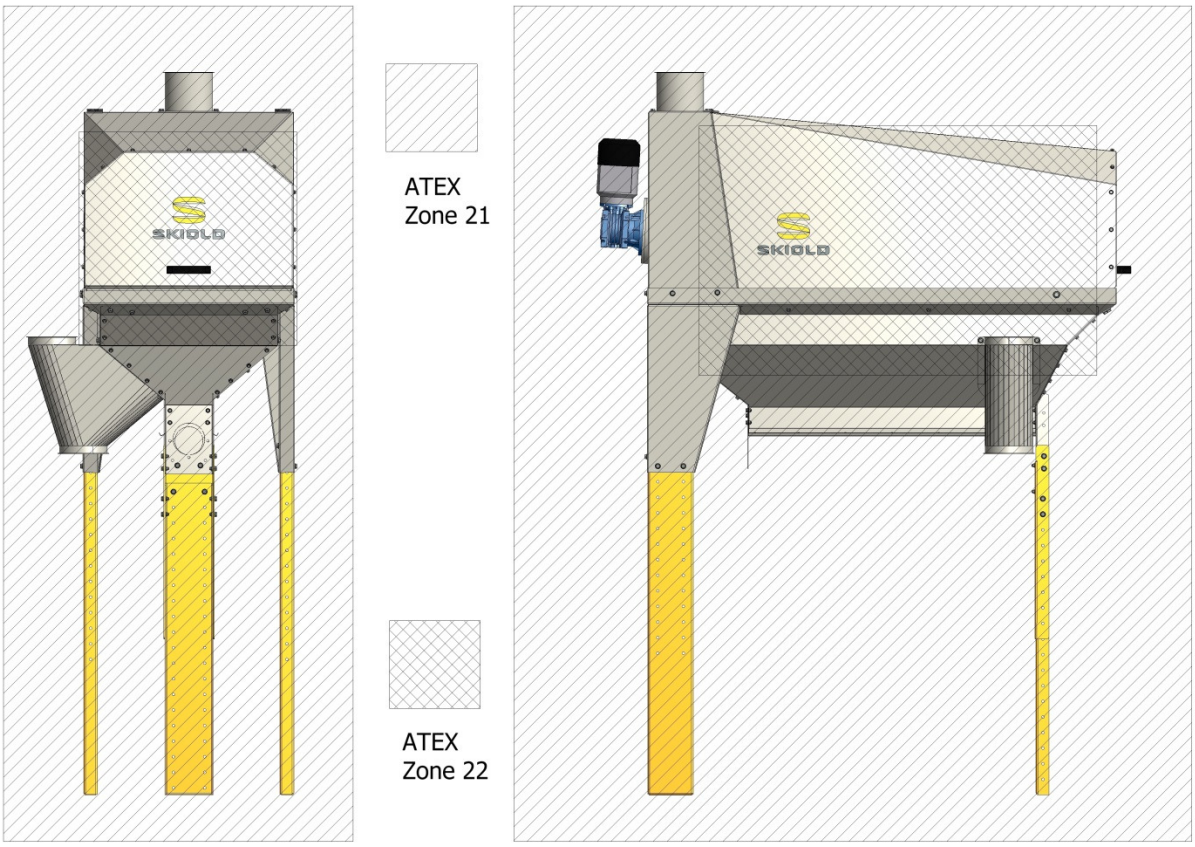

Ex-zones according to unified standards DS/EN 1127-1, DS/EN 60079-10-2, DS/EN 13463-1.

Around the cleaner and in a distance of min. 1 m to the extreme point is zone 22.

Inside the drum cleaner around the screens is zone 21.

The precondition for the ex-zone specification is that the drum cleaner is equipped with cover, and that tight connections through the cover have been mounted.

If the drum cleaner is placed near other equipment with a zone stated to have larger danger of explosion, and so that the zones are overlapping each other, the most important zone statement is valid in the overlapped area.

13.0 SPARE PARTS LIST

Fig. 7 Spare parts drawing

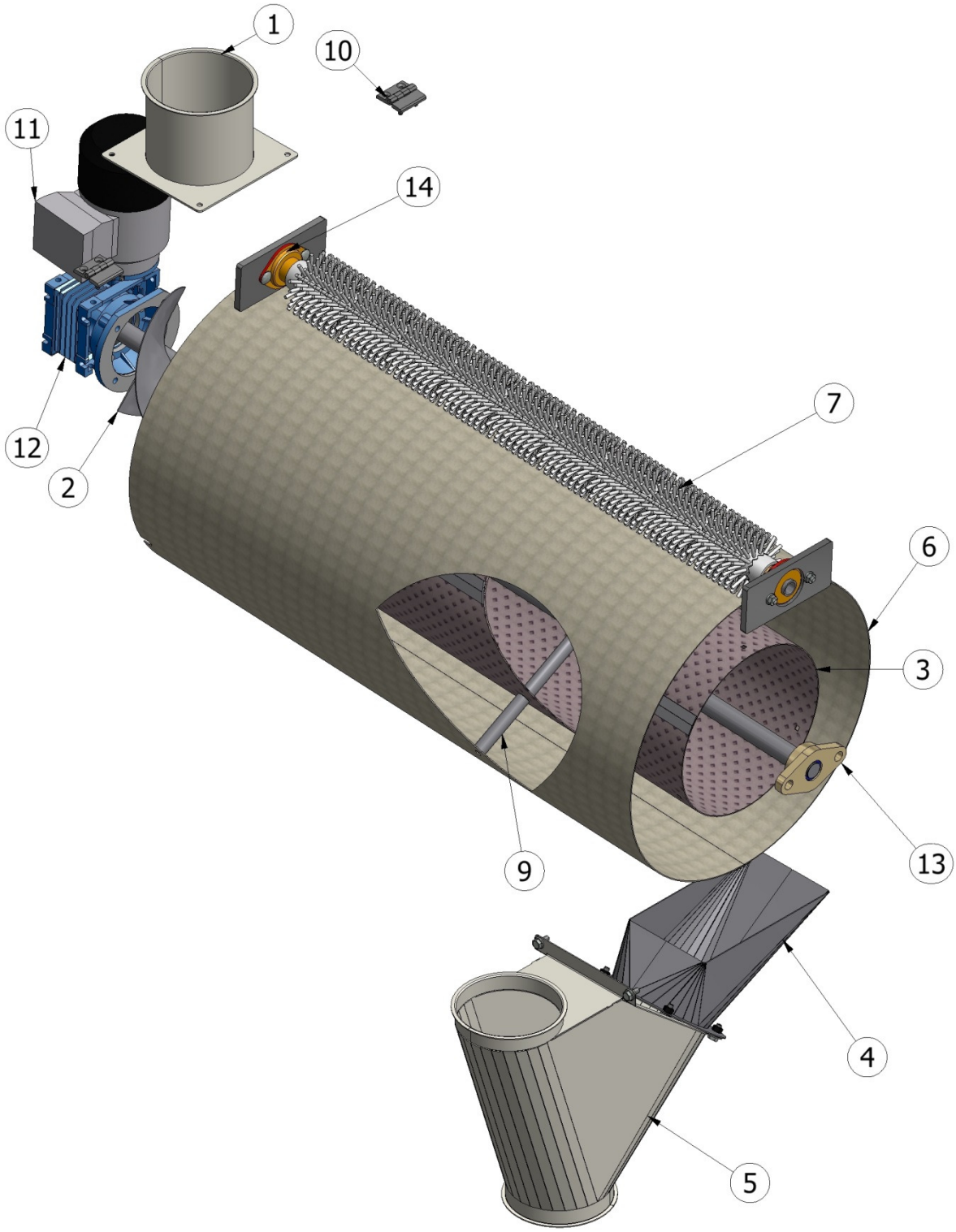

Pos. 1	100029W	Connection to cyclone Ø 150 mm
Pos. 2	201342	Auger shaft
Pos. 3	201343	Ø 15 upper screen
	201356	Ø 12 upper screen
Pos. 4	201347	Inner outlet
Pos. 5	201350	By-pass
Pos. 6	201351	Lower screen
Pos. 7	201352	Cleaning brush
Pos. 9	206637	Screwed cap between upper and lower screen
Pos. 10	206671	Plastic hinge 50x50
Pos. 11	2340148	Motor 0.25 kW 1000 rpm B14
Pos. 12	2392092	Gear NMRV050 FC i=40
Pos. 13	6401077	Flange bearing RAT 25

13.1 Technical Data

Motor kW	0.25
Screen area upper screen m³	0.8
Screen area lower screen m³	1.5
Rpm of gear	25

Capacity:

Precleaning (wheat) t/hour	3.2
Fine cleaning (wheat) t/hour	1

14.0 CE/ATEX DECLARATION OF CONFORMITY

CE/ATEX DECLARATION OF CONFORMITY

The signer

SKIOLD A/S

Kjeldgaardsvej, 9300 Sæby, Denmark, tel. No. +45 99 89 88 87

hereby declare that the product:

Description	**Type**
Drum cleaner	200126

was constructed and manufactured in conformity with
the following directives:

Directive	**Standard**
CE/ATEX directives 2006/42/EC and 1994/09/EC with revisions	DS/EN 12100:2011 DS/EN 60079-0 DS/EN 60079-10-2 DS/EN 60079-14 DS/EN 60204-1 DS/EN 13463-1 DS/EN 1127-1

Sæby, Denmark, 08.12.2014
Place and date of issue

Samuel Waldorph
Managing director